Sept. 24, 1946. S. DU PONT 2,408,254

SUSPENSION UNIT FOR VEHICLE WHEELS

Filed April 19, 1944

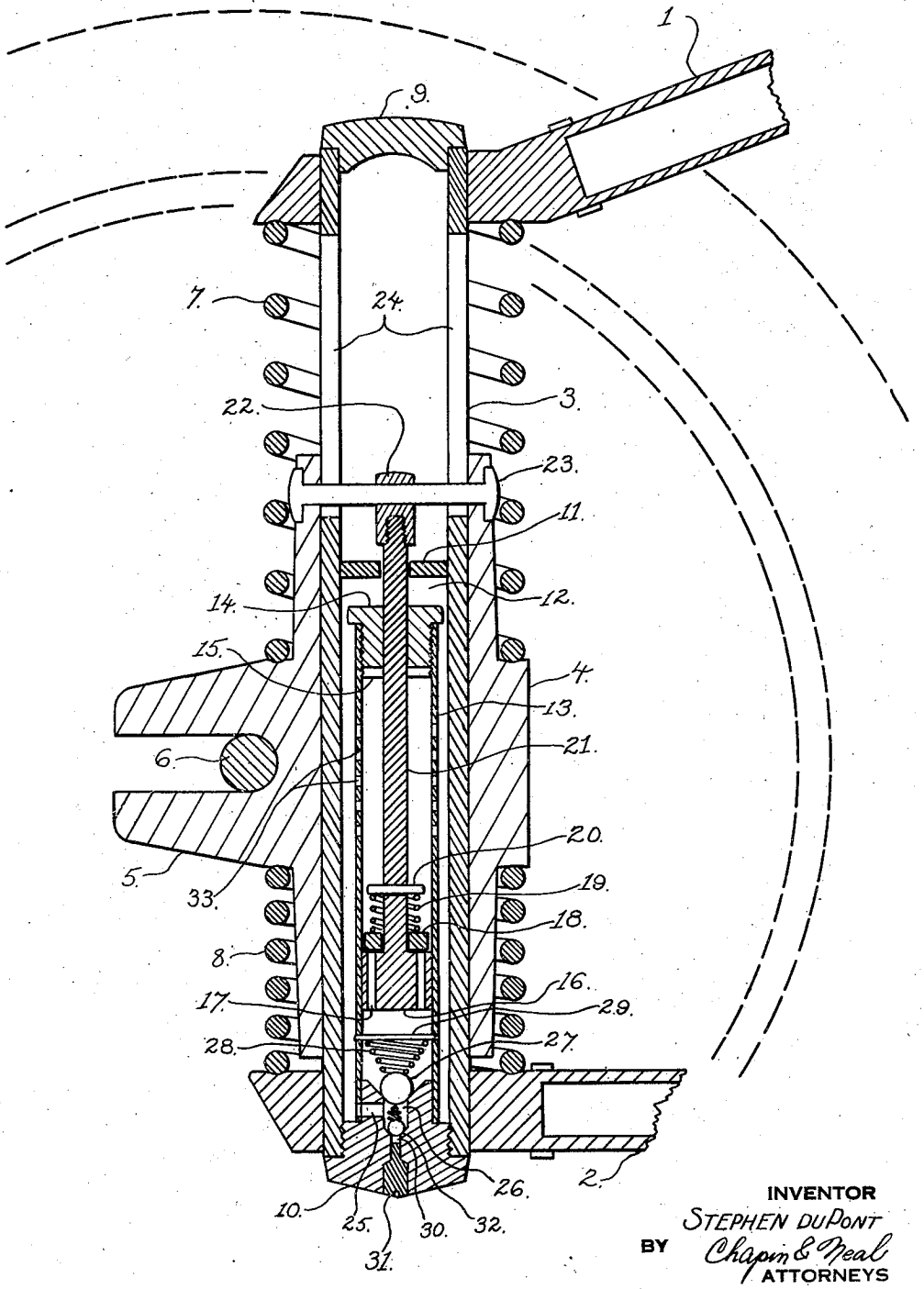

INVENTOR
STEPHEN DUPONT
BY Chapin & Neal
ATTORNEYS