Sept. 6, 1932. A. STERN ET AL 1,876,155

DELIVERY CAR

Filed Feb. 28, 1930 2 Sheets-Sheet 1

Fig. 1.

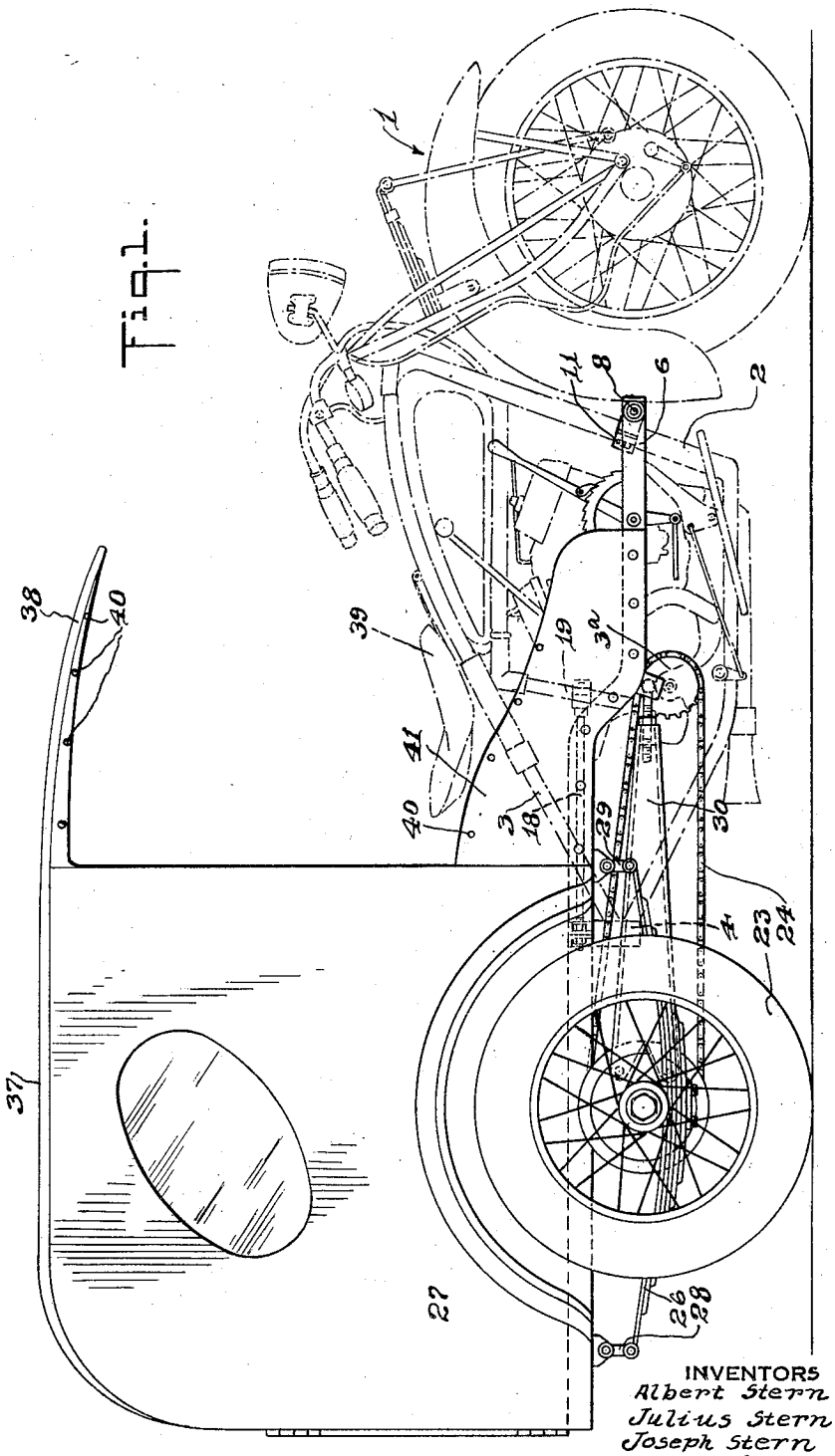

INVENTORS
Albert Stern
Julius Stern
Joseph Stern
By J. Kaplan
ATTORNEY